Transition Rectangular to Round

Ordering Information

- When ordering, specify material, gauge (if non-standard), round end ø, square end H and W dimensions, and end styles. Also specify desired length.
- L must be at least 75% of W or transition will be Square to Square.
- L of Square to Round (at least 7" minimum).
- L of Square to Square (4" minimum).

Transition Rectangular to Round

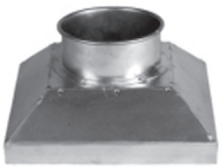

Transition Square to Square

QF & Flanged Material Gauges

Standard metal thickness is based on square end opening

Standard Metal Thickness (ga)	Square End Opening SqIn (in²)
22	16-144
20	145-324
18	325-576
16	577-1296
14	1297-2304
12	2305-3600
10	3601-22500

Ex: 12"QF to 24"x36"RawID Transition, so the square end opening is 24x36 = 864in² which falls in the 577-1296 range; therefore, the metal thickness is 16 gauge.

Construction
Seam: longitudinal seam is lapped, spot welded, and caulked.
Collars: located on the exterior side of each port and considered as air flow non-directional. Collars have a laser welded longitudinal seam. If air flow directional product is required, it must be stated on the PO and additional cost may be incurred. A raised lap seam and spot weld are used for attaching the collar to the body and no caulking is used. If caulking is required, additional cost may be incurred.

Optional End Styles
Standard QF end can be changed to Raw ID (RI), Raw OD (RO), No Fitting (NF), Hose Adapter (RF), Flat Flange (FFL), Angle Flange (AFL), or Van Stone (VS).
Rectangular / square end standard options are Raw, Hemmed, Angle Flange (AFL), Sheet Metal Flange (SMFL), or Flat Flange (FFL).

Notes
Additional costs for flanges. Prices are determined by the rectangular dimensions, with adder for flange(s) if needed.
If flange other than Angle Flange is requested and no hole pattern is supplied, flange will be supplied "blank" to be field drilled.
Standard flange material is 1½ W x 3/16" THK angle.
Transition diameter sizes exceeding 24" will be supplied with a flanged round end.

Rectangular to Round

By default, L=W (min. L=Wx0.75 or 7" whichever is greater)

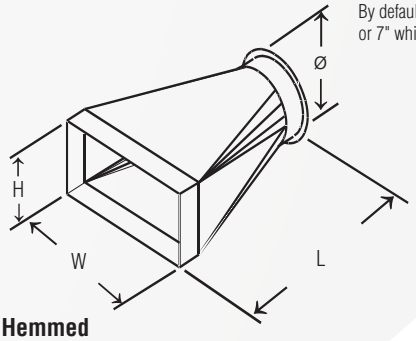

Hemmed or Raw Rectangular End Style

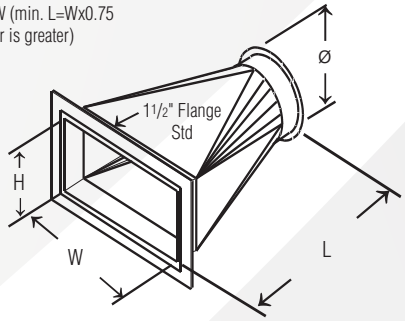

Flanged Rectangular End Style

Square to Square

By default, L=W (min. 4")

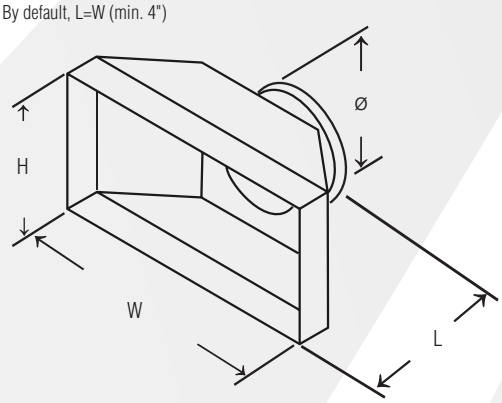

Describe your Transition requirements										
Qty	Material	Gauge	ø	End Style	H	W	End Style	L	Flange Dwg	Notes

11/07/22